Hillmar
Hillmar Industries Ltd.
7371 Vantage Way
Delta, BC V4G 1C9
P:604 946-7115 F:604 946-0329
info@hillmar.com www.hillmar.com

INDUSTRIAL DBCB-FM
DBCB-CSBFM-207-05600
SPECIFICATION SHEET
SLS & MKTG
ENGLISH

Sheet Number:	
Job Number:	
Form Number:	829-723-47078PT

Company / Project Reference:	Date.:	Page.:	Document Package No.:	Rev.:
		1 OF 1		

Inventor Drawing

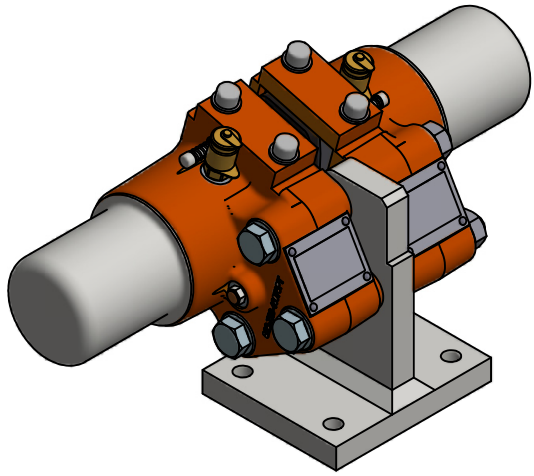

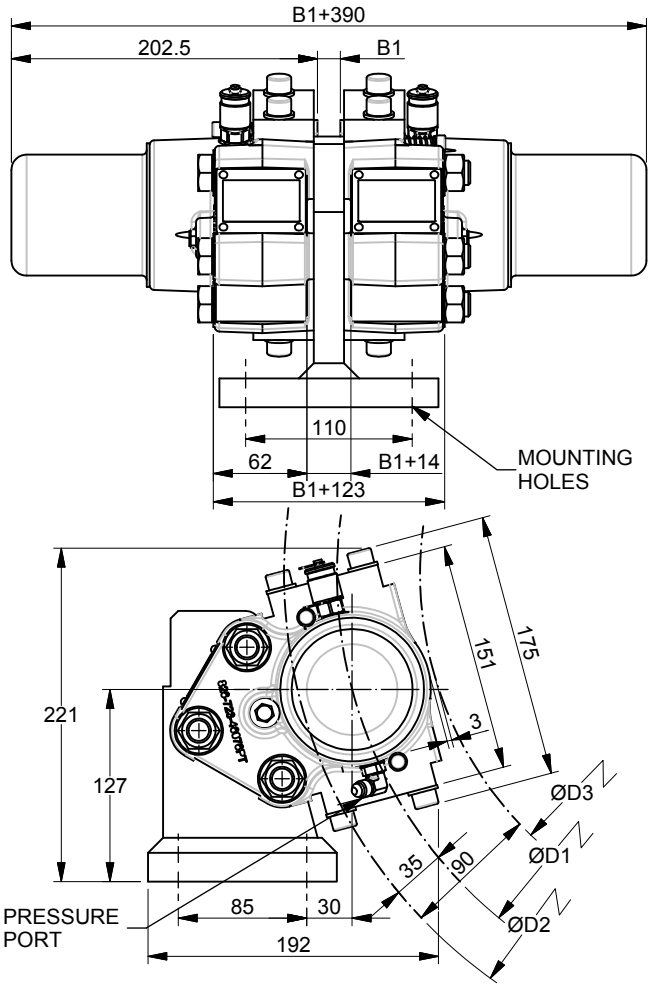

FEATURE	CODE
Industrial disc brake	DBCB
Series	CSB
Brake size	207
Foot mount	FM
Nominal braking force F_B (N)	05600

Example for ordering	DBCB-CSBFM-207-05600

TECHNICAL DATA

Clamping force (N) (F_C)		14000
Braking force static μ=0.5 (N) (F_B)		7000
Braking force dynamic @ μ=0.4 (N) (F_B)		5600
Loss of force pre 1mm of pad wear (%)		4.6
Maximum wear of each brake pad (mm)	Sintered	6.5
	Organic	6.5
Disc thickness B1 (mm)		15 - 30
Theoretical friction diameter		ØD1
Disc diameter		ØD2
Maximum coupling hub diameter		ØD3
Brake pad width (m)		0.06
Nominal air gap		1 mm / side
Braking torque (Nm) (M_B)		$M_B=F_B$ x (D2-0.09) / 2
Operating pressure (bar)		71
Maximum pressure (bar)		79
Oil volume (CC) to release 1mm/half		1.34
Pressure port connection (2 ports) T1		-4 37° JIC
Temperature range (°C)		-20 to +70
Standard paint PASTEL ORANGE		RAL #2003
Mounting holes (braket)		4 x Ø13.5
Mounting bolts		4 x M12 CL 10.9
Bolt tightening torque		300
Weight of brake (2 halves) (kg)		45

NOMINAL SPECIFICATION

Actual torque may vary depending on adjustment of brake and coefficient of friction. Brake supplied standard with organic linings.

Bearing and structure loads must be checked due to unbalanced brake loads.

NOTES

All figures are nominal figures only

All dimensions are in millimeters

Document Template #710-101-62058

** ALL TECHNICAL DATA IS SUBJECT TO CHANGE WITHOUT NOTICE **
Hillmar works have a fully registered ISO 9001-2008 quality assurance programme (QCB #01-1525)

C:\TEMP\6ba16fbf-64ec-4ab6-bc32-67de401a849b\80000526179\HILLMAR\HILLMAR PRODUCTION\08 INDUSTRIAL DB\0700-8\07008001 DBCB-CSB\SPC-SHT-DBCB-CSB\47078 DBCB-CSBFM-207-05600.idw